Hal Nelson

Senior Vice President
and General Manager,
Corning Environmental Technologies

Forward-Looking and Cautionary Statements

The statements contained in this presentation that are not historical facts or information and contain words such as “will,” “believe,” “anticipate,” “expect,” “intend,” “plan,” “seek,” “see,” “would,” and “target” and similar expressions are forward-looking statements. These forward-looking statements are made pursuant to the safe harbor provisions of the Private Securities Litigation Reform Act of 1995 and include estimates and assumptions related to economic, competitive and legislative developments. Such statements relate to future events that by their nature address matters that are, to different degrees, uncertain. These estimates are subject to change and uncertainty which are, in many instances, beyond our control. There can be no assurance that future developments will be in accordance with management’s expectations. Actual results could differ materially from those expected by us, depending on the outcome of various factors. We do not undertake to update forward-looking statements.

Some of the risks, uncertainties and other factors that could cause actual results to differ materially from those expressed in or implied by the forward-looking statements include, but are not limited to: the effects of acquisitions, dispositions and other similar transactions, global business, financial, economic and political conditions; tariffs and import duties; currency fluctuations between the U.S. dollar and other currencies, primarily the Japanese yen, euro, Chinese yuan and South Korean won; product demand and industry capacity; competitive products and pricing; availability and costs of critical components and materials; new product development and commercialization; order activity and demand from major customers; the amount and timing of our cash flows and earnings and other conditions, which may affect our ability to pay our quarterly dividend at the planned level or to repurchase shares at planned levels; possible disruption in commercial activities due to terrorist activity, cyber-attack, armed conflict, political or financial instability, natural disasters, or major health concerns; unanticipated disruption to equipment, facilities, IT systems or operations; effect of regulatory and legal developments; ability to pace capital spending to anticipated levels of customer demand; rate of technology change; ability to enforce patents and protect intellectual property and trade secrets; adverse litigation; product and components performance issues; retention of key personnel; customer ability, most notably in the Display Technologies segment, to maintain profitable operations and obtain financing to fund their ongoing operations and manufacturing expansions and pay their receivables when due; loss of significant customers; changes in tax laws and regulations including the Tax Cuts and Jobs Act of 2017; the impacts of audits by taxing authorities; and the potential impact of legislation, government regulations, and other government action and investigations.

For a complete listing of risks and other factors, please reference the risk factors and forward-looking statements described in our annual reports on Form 10-K and quarterly reports on Form 10-Q.

© 2019 Corning Incorporated

Use of Non-GAAP Financial Information

Corning has included non-GAAP financial measures in this presentation to supplement Corning's consolidated financial statements presented on a GAAP basis. In managing the Company and assessing our financial performance, we adjust certain measures provided by our consolidated financial statements to exclude specific items to arrive at core performance measures.

These items include gains and losses on our translated earnings contracts, acquisition-related costs, certain discrete tax items, restructuring and restructuring-related charges, certain litigation-related expenses, pension mark-to-market adjustments and other items which do not reflect on-going operating results of the Company or our equity affiliates. Additionally, Corning has adopted the use of constant currency reporting for our Display Technologies and Specialty Materials segments for the Japanese yen, South Korean won, and Chinese yuan. Effective January 1, 2019, Corning has adopted the use of constant currency reporting for our Environmental Technologies and Life Sciences segments for the euro, Japanese Yen and Chinese yuan. The company believes that the use of constant currency reporting allows investors to understand our results without the volatility of currency fluctuations, and reflects the underlying economics of the translated earnings contracts used to mitigate the impact of changes in currency exchange rates on our earnings and cash flows. Corning also believes that reporting core performance measures provides investors greater transparency to the information used by our management team to make financial and operational decisions.

These measures are not prepared in accordance with Generally Accepted Accounting Principles in the United States ("GAAP"). We believe investors should consider these non-GAAP measures in evaluating our results as they are more indicative of our core operating performance and how management evaluates our operational results and trends. These measures are not, and should not be viewed as a substitute for, GAAP reporting measures. Definitions of these non-GAAP financial measures and reconciliations of these non-GAAP financial measures to the most directly comparable GAAP financial measures can be found on the Company's website by going to the Investor Relations page and clicking "Quarterly Results" under the "Financials and Filings" tab.

With respect to the Company's outlook for future periods, we are not able to provide reconciliations for these non-GAAP measures because the Company does not forecast the movement of foreign currencies against the U.S. dollar, or other items that do not reflect ongoing operations, nor does it forecast items that have not yet occurred or are out of the Company's control. As a result, the Company is unable to provide outlook information on a GAAP basis.

© 2019 Corning Incorporated

Making Cleaner Air Possible



The Los Angeles Times, via Associated Press



© 2019 Corning Incorporated

$1.3B
Sales

Mid-teens
ROIC



© 2019 Corning Incorporated

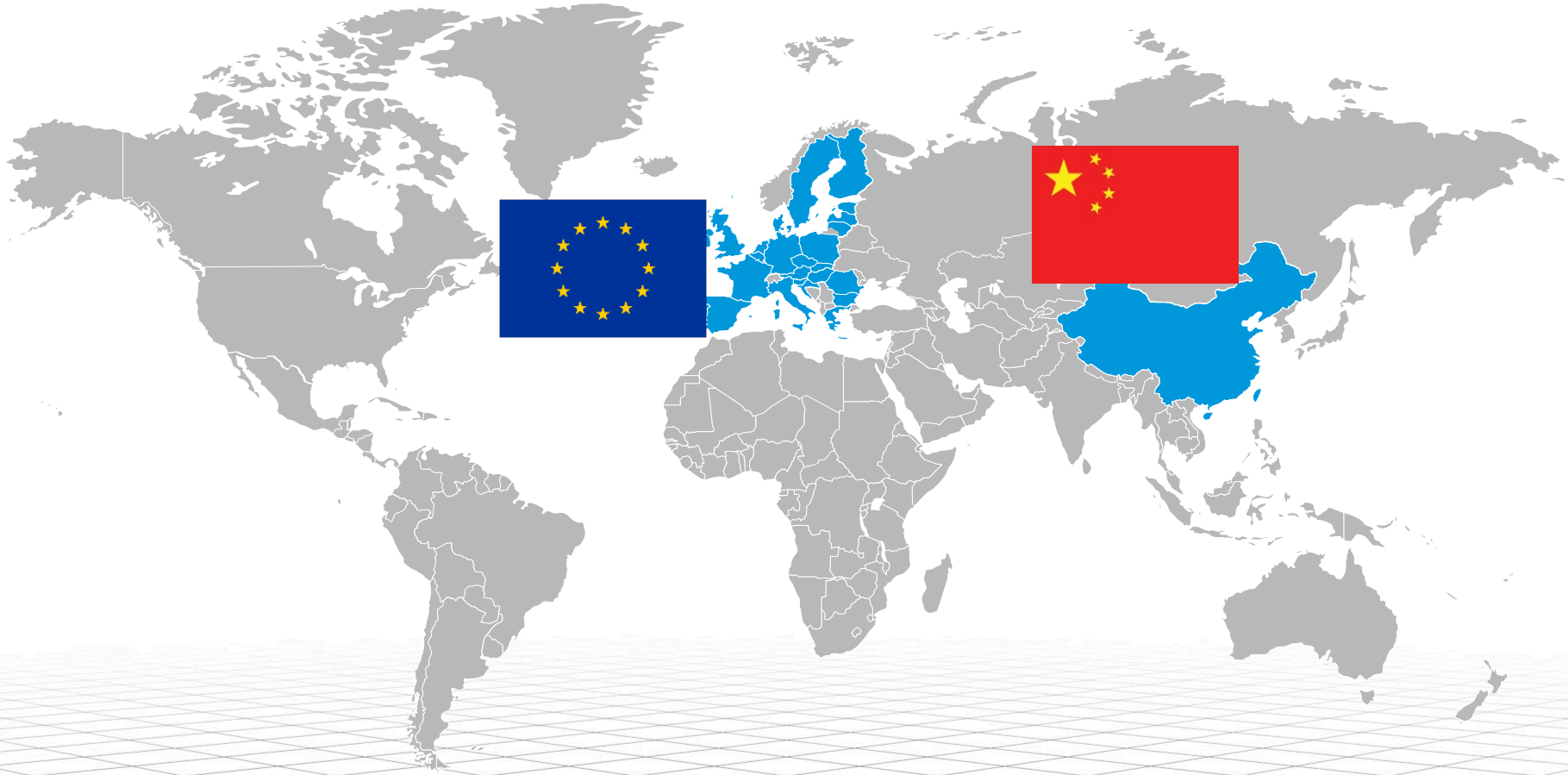

© 2019 Corning Incorporated

Fine Particulate Pollution



© 2019 Corning Incorporated

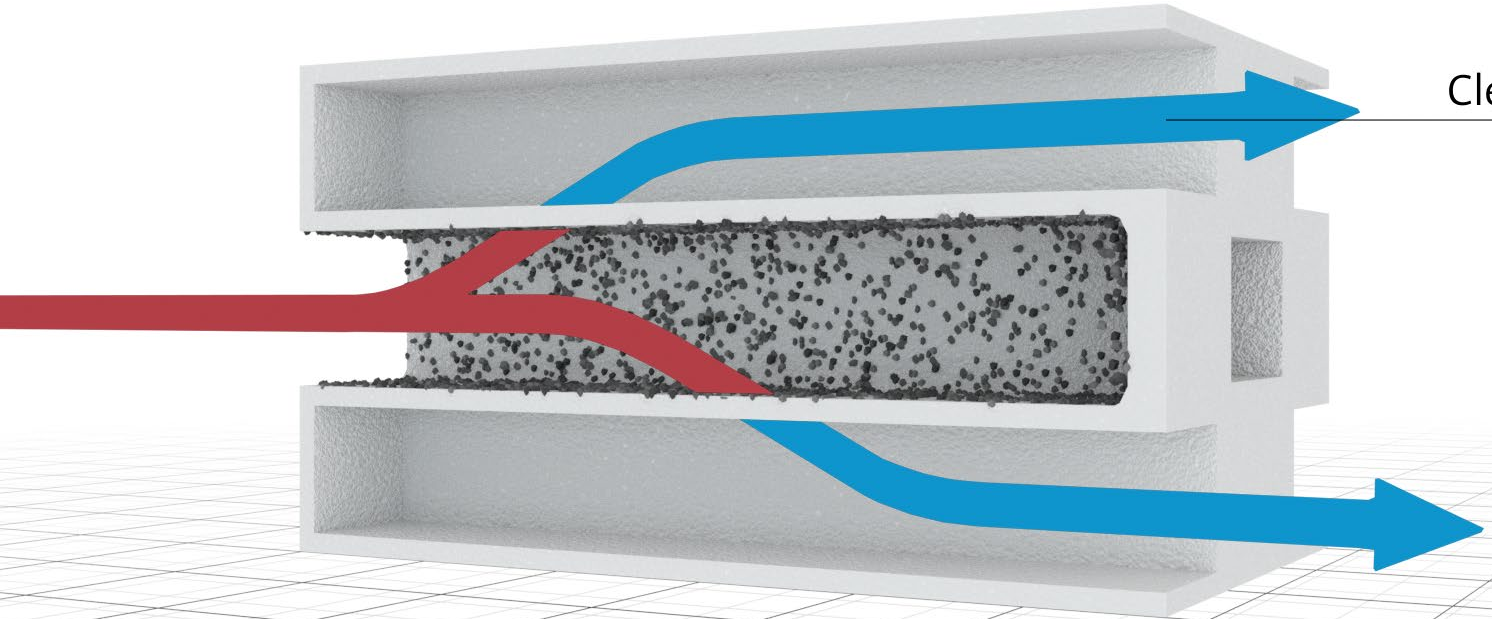

CORNING

© 2019 Corning Incorporated

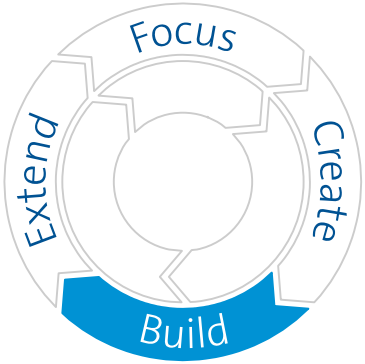



© 2019 Corning Incorporated

>50% of Awarded Platforms

© 2019 Corning Incorporated

+$30 Per Car

Celcor® Substrates

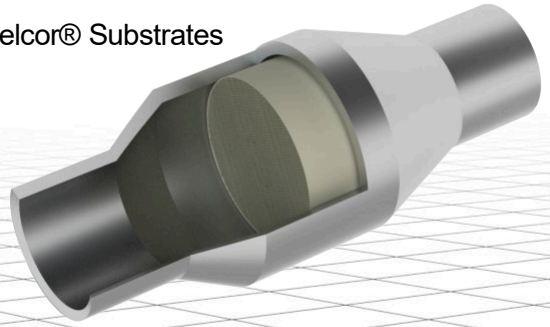

DuraTrap® GC Filters

Celcor® Substrates

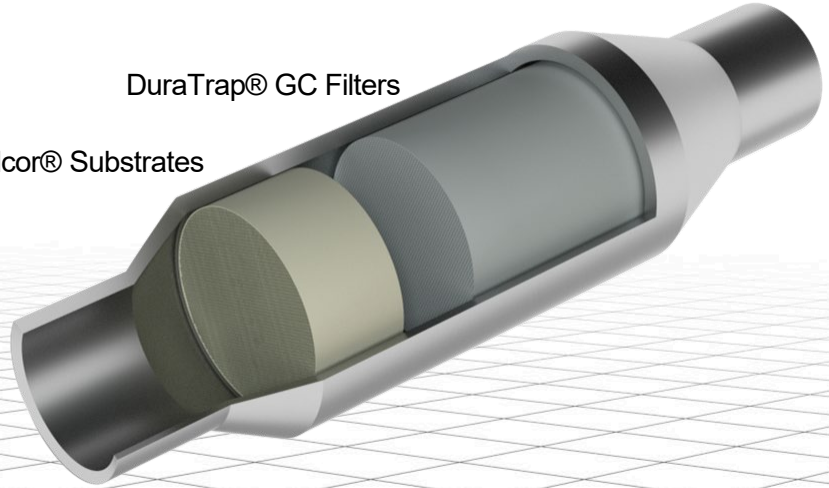

© 2019 Corning Incorporated

Corning GPF Sales Opportunity

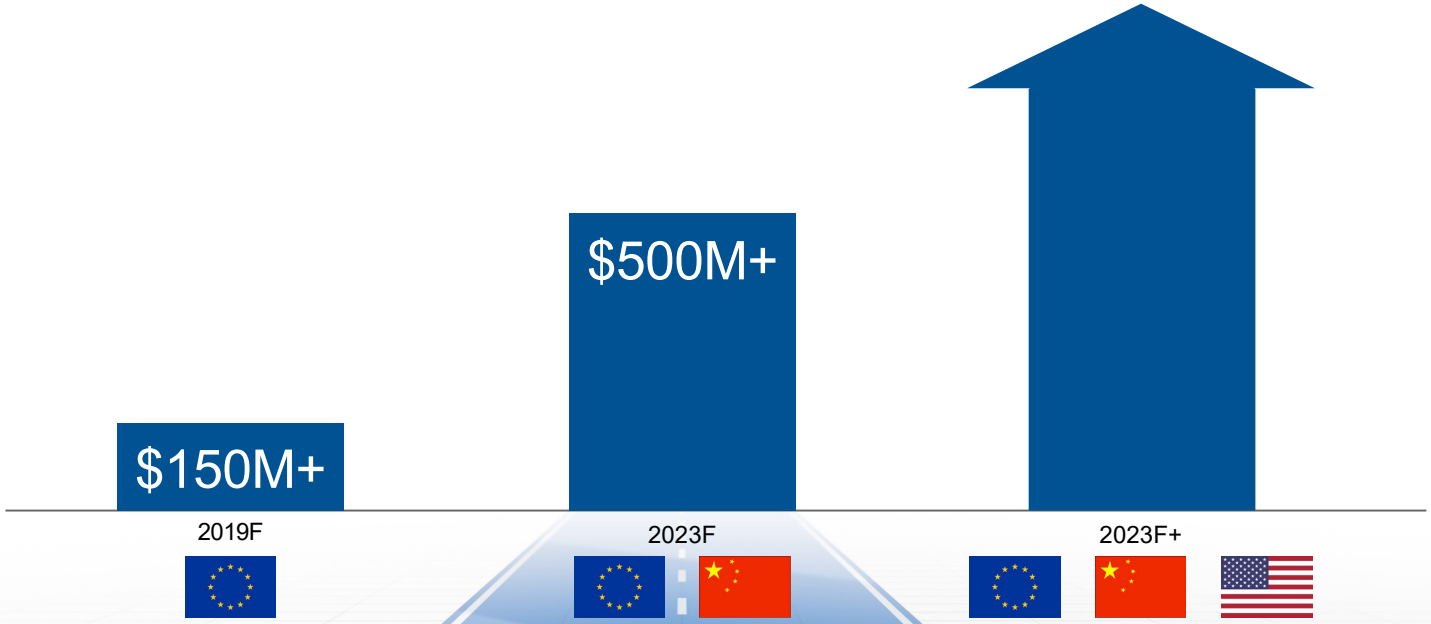

© 2019 Corning Incorporated

Opportunities in Heavy-Duty Diesel



© 2019 Corning Incorporated



© 2019 Corning Incorporated



Cost

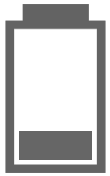

Range



Infrastructure

© 2019 Corning Incorporated

2 to 3 Hybrids Sold for Every Battery Electric Vehicle

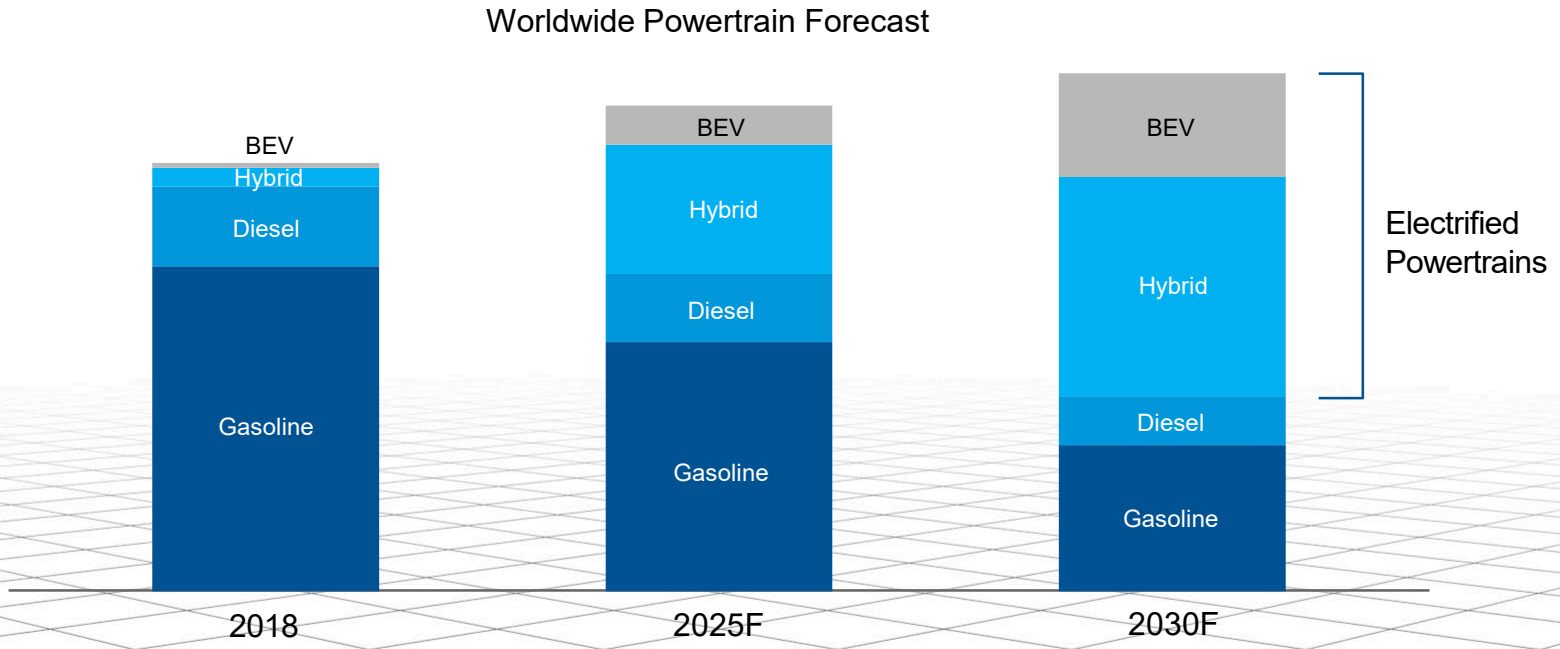

Source: IHS Markit® data, Corning analysis

© 2019 Corning Incorporated

Hybrids Require More Content

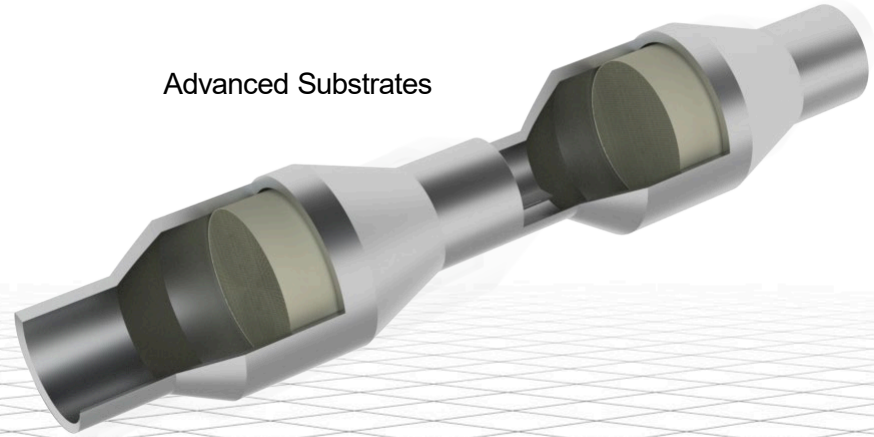

© 2019 Corning Incorporated

Hybrids Require More Content

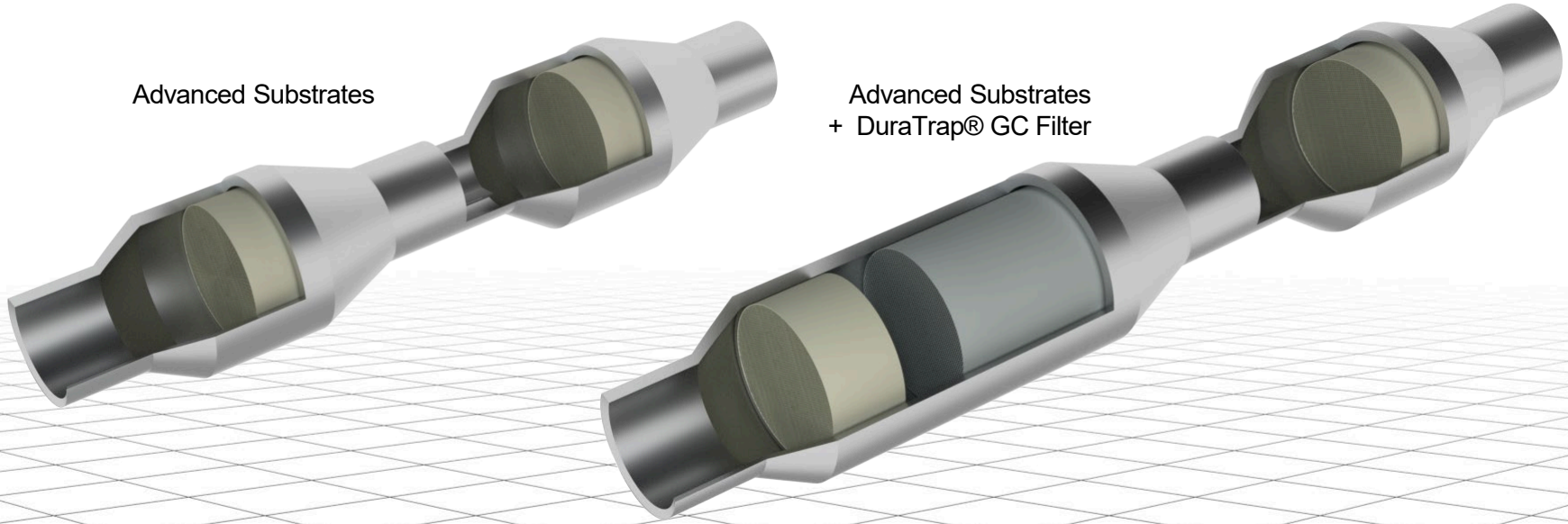

© 2019 Corning Incorporated

Our Opportunity Per Car Triples

Particulate Regulations

Hybrid Adoption

$45 Per Car Opportunity



© 2019 Corning Incorporated

Environmental Technologies



© 2019 Corning Incorporated

CORNING